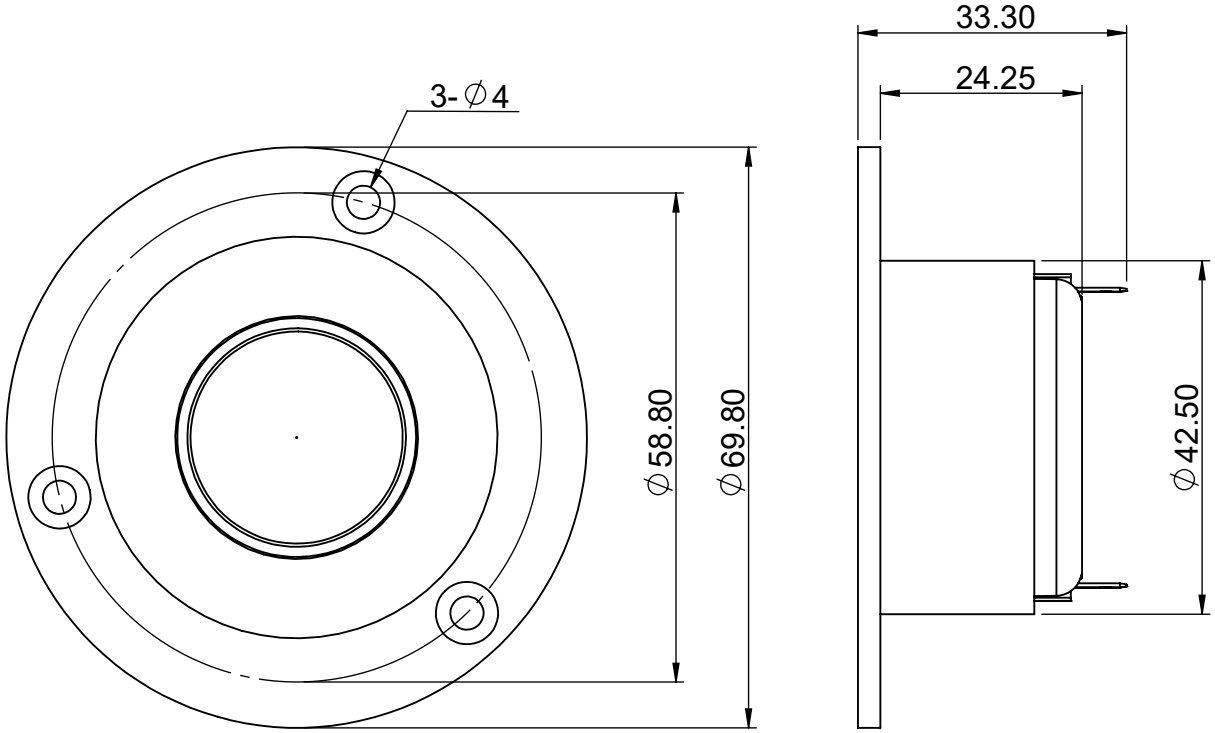
3-∅4
∅58.80
∅69.80
33.30
24.25
∅42.50