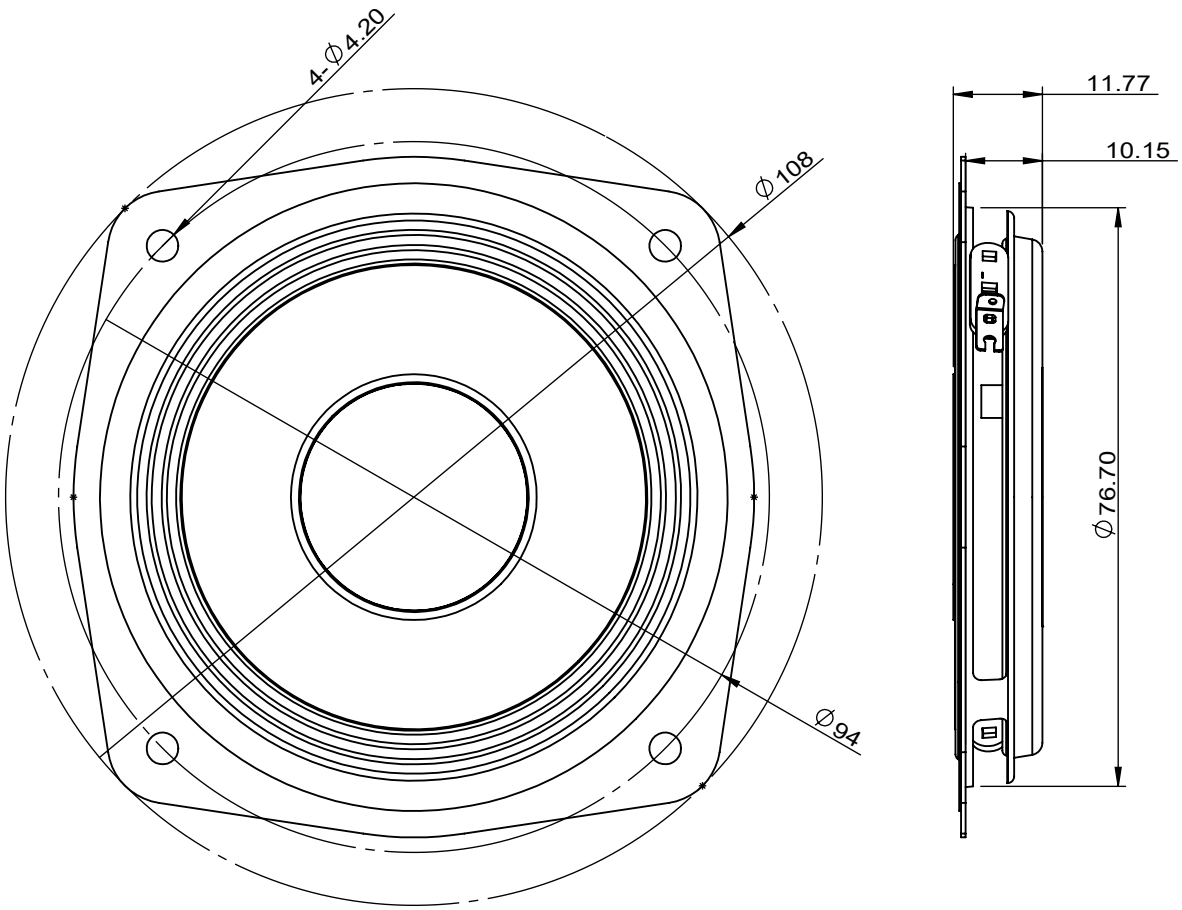
4-∅4.20
∅108
∅94
11.77
10.15
∅76.70