18NPW

APPLICATION:

- Ideal for high output, high power subwoofers, with band pass or port loaded enclosure designs.

REDCATT®

Neodymium Low Frequency Woofer

Ordering code: 18NPW-017

Cont. Power	Sens.	Fs	Freq. Range	VC Dia.	VC Wire	Cone/Surround/Dome	Magnet type
2400 watts	98 dB	36 Hz	25 Hz - 1.5 kHz	4" 1in/1out	Copper	Paper w. CF / Fabric	Neodymium

The 18NPW is a high efficiency, (98 dB 1watt / 1 meter) 18-inch woofer with incredibly linear frequency response characteristics, extreme high power handling capability while generating low harmonic distortion artifacts. The 18NPW uses a lightweight, but strong, carbon fiber loaded cone assembly along with a high excursion triple roll constant geometry surround. This combination provides remarkable strength, high efficiency and a peak to peak maximum excursion of 50mm (2in).

Power Handling

At the core of the 18NPW is it's voice coil technology featuring a composite Polyimide former material capable of withstanding peak temperatures in excess of 350°C, well beyond the thermal requirements of modern professional audio systems. The 18NPW delivers incredible performance.

REDCATT has implemented a double layer/silicone spider design to ensure long term Fs memory, consistency and diminish anomalies associated with spider deterioration. The sealed spider works as a air pump and pushes the air trough out motor to increase heat transfer and cooling of the parts.

Frequency Response

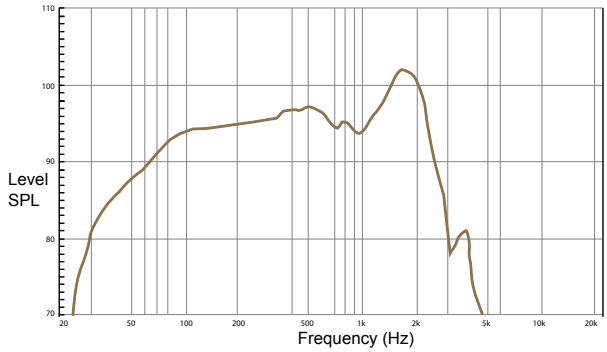

Impedance Response

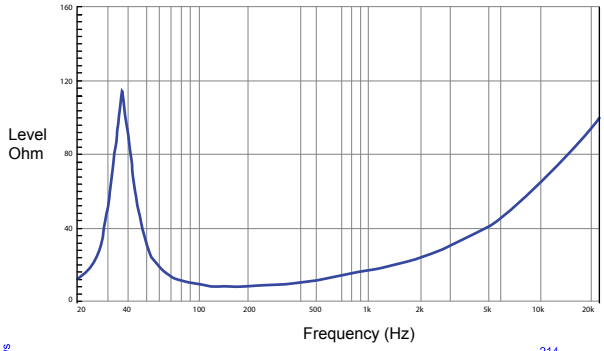

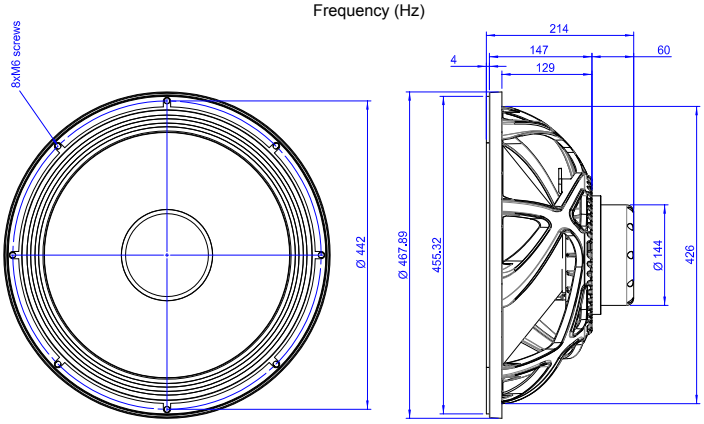

General Specifications	
Nominal Diameter:	460 mm (18 in.)
Rated Impedance:	8 ohm
Power Handling:	
AES Power:	1200 Watts
Power Compression @-10dB	0.7dB
Power Compression @-10dB	1.5dB
Power Compression @Max Power	2.2dB
Maximum Recommended Xover Freq.:	1,000 Hz
Recommended Enclosure Volume:	150 - 350 Liters 4 - 12 cuft.
Cone Design:	Strght Gmtry, Redcatt Cell.
Fs	36 Hz
Re	5.35 Ohm
Sd	1256 cm² (194 in.²)
Qms	9.5
Qes	0.34
Qts	0.33
Vas	212 Liters
Mms	199 g
BL product (force factor)	27.73
Peak to Peak Displacement (mm)	24 mm
Le (mH @1kHz)	1.6
Overall diameter	467.9 mm (18.42 in.)
No. Of mounting holes	8
Bolt circle diameter	442 mm (17.40 in.)
Front mount baffle cutout dia.	428 mm (16.85 in.)nominal
Rear mount baffle cutout diameter	430 mm (16.92 in.)nominal
Total depth	214 mm (8.42 in.)
Flange and gasket thickness	22 mm (0.86 in.)
Net weight	9.1 kg (20.1 lbs.)
Shipping weight	10.2 kg (22.5 lbs.)
Packing Dimensions	485x 485x 260 mm

®