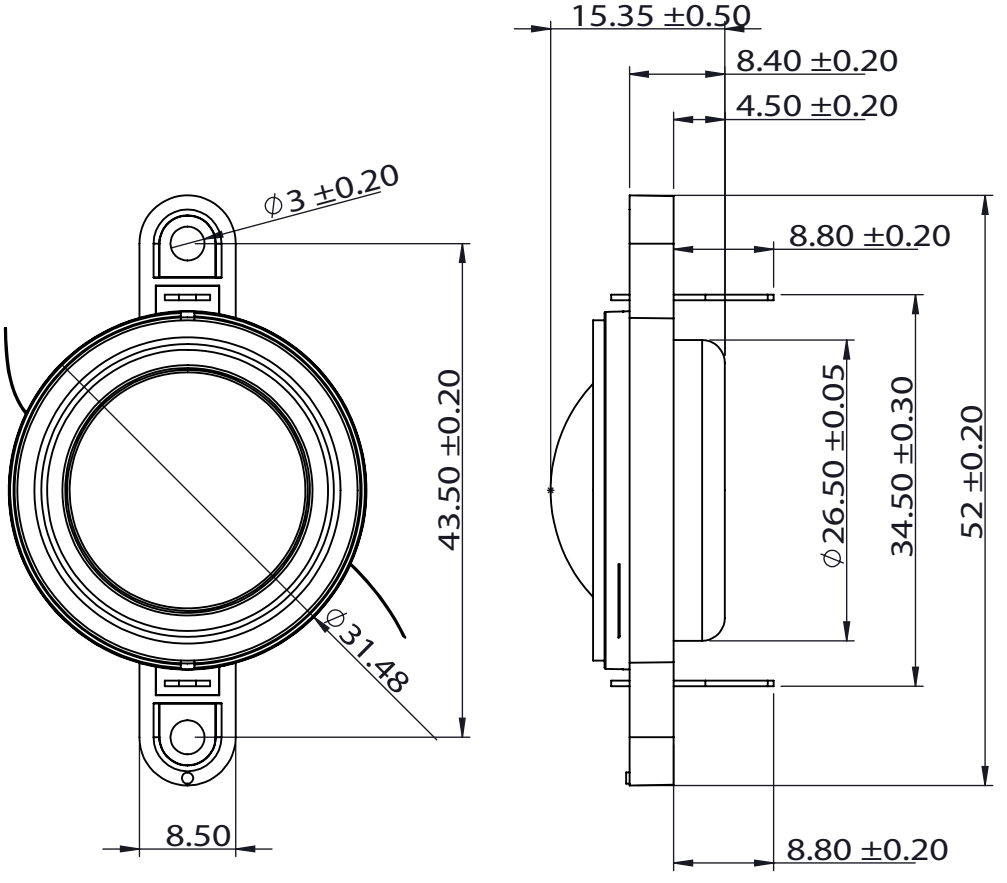
15.35 ±0.50
8.40 ±0.20
4.50 ±0.20
ϕ3 ±0.20
8.80 ±0.20
43.50 ±0.20
ϕ26.50 ±0.05
34.50 ±0.30
52 ±0.20
ϕ31.48
8.50
8.80 ±0.20