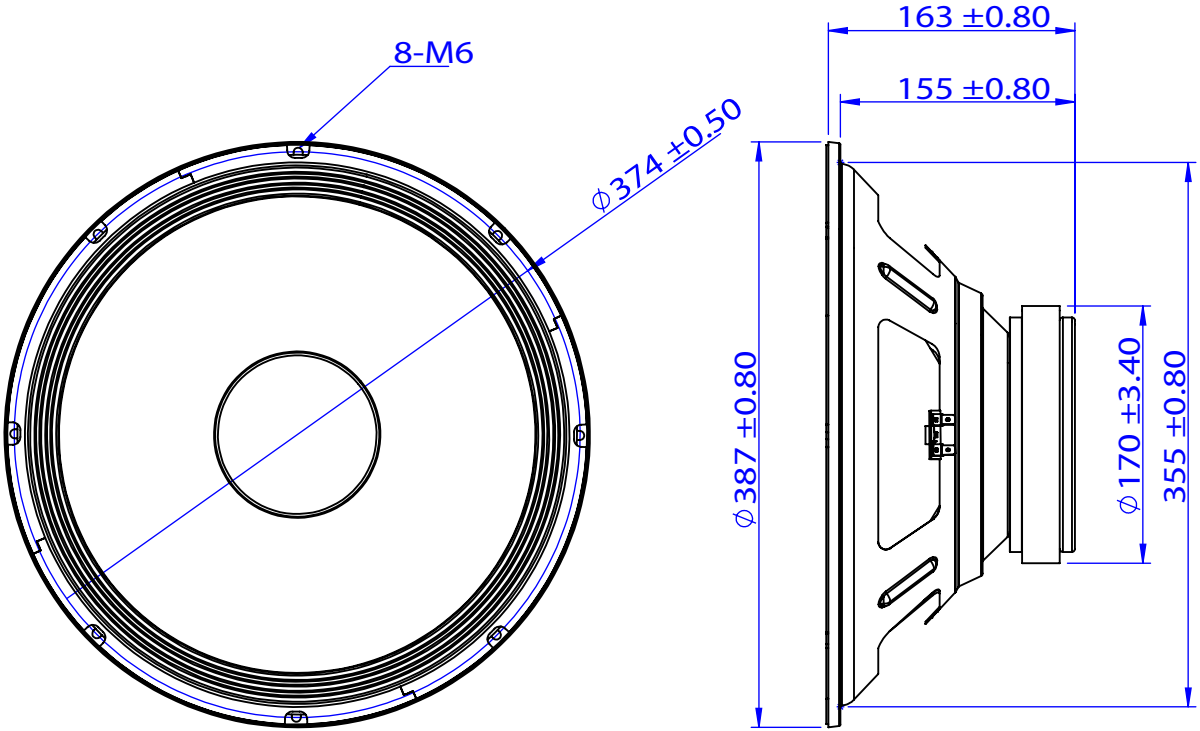
8-M6
∅374 ±0.50
163 ±0.80
155 ±0.80
∅387 ±0.80
∅170 ±3.40
355 ±0.80